Energy Node Locator - A Pathway to Track Energy At The Point of Use, Remotely, in Buildings

Sameena Khan; Muhammad Zulfiqar;
Mahmoud Alahmad; Lim Nguyen; Hamid Sharif
University of Nebraska, Lincoln
Omaha, NE, USA

Nasser Aljuhaishi
Kuwait University, Kuwait

Ahmed Gaouda; Khaled Shuaib;
Mohammed Abdel-Hafez
United Arab Emirates University
Al-Ain, UAE

***Abstract*— The smart grid will increase building energy efficiency and conservation via combining information and communication technologies, advanced instrumentations, system intelligence, and information on the end user. Specifically Demand Side Management (DSM) programs serve as an aid in energy conservation and management strategies as well as in the collection of real-time consumption information data. As proposed in this paper, real-time, fine-grain consumption data at the point of use in buildings can be used by building energy managers, utilities, and the end user for planning, load forecasting, and feedback for providing information that may lead to end user behavior change. This paper focuses on the development of a platform detecting every active node in the building remotely and using a combination of tools to monitor and locate these active nodes. The paper will discuss the main component of this platform, the energy node locator and how it works based on the principles of Time Domain Reflectometry (TDR). Preliminary results will be presented and used to evaluate the node locator principles. Summary and future work will be presented to discuss the framework moving forward.**

Keywords— energy conservation; real-time monitoring; node monitoring, Time Domain Reflectometry

I. INTRODUCTION

Helping the end user obtain and manage energy involves three main areas within the smart grid, namely, information and infrastructure, instruments and technology, and intelligence and automation [1]. Demand Side Management (DSM) programs and real-time monitoring of consumption information play a major role within the three areas to aid in energy reduction and management. Hence, to enable the customer engagement, two-way communication and advanced metering infrastructure (AMI) must be established between the utility company and its customers/users. Load information from the customer side and the supply and demand based energy costs from the utilities are exchanged to create a better-regulated and more reliable power generation and supply environment. These programs aim to improve the design of buildings through the use of energy efficient equipment and to reduce loads by encouraging end users to modify their energy consumption behaviors [2-4]. The built environment as such, has significant energy savings potential. According to United States Green Building Council (USGBC), the built environment in the United States accounts for 72% of the total US electricity consumption, 39% of the total energy use, 38% of all CO2 emissions, 40% of raw material use, 30% of waste output (136 million tons annually), and 14% of potable water consumption [5]. The U.S. Energy Information Administration (EIA) forecasts in its 2014 Annual Energy Outlook that electricity consumption will continue to increase by an annual growth from 2012-2040 by 0.7 percent for the residential sector, 0.8 percent for the commercial sector, and 0.9 percent for the industrial sector (see Figure 1). Across all sectors the annual growth from 2012-2040 will be 0.8 percent [6].

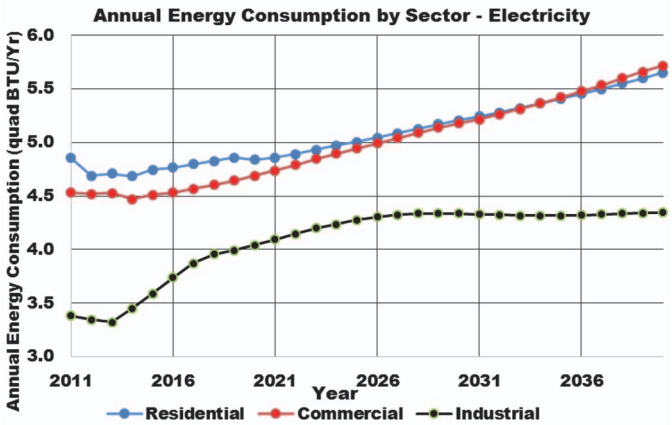

Fig. 1. EIA's Annual electricity consumption forecast for the commercial, residential and industrial sector in the U.S.A. through 2040 [6].

Studies have demonstrated that energy waste occurs in both the commercial and residential sectors. Research has shown that residential energy consumers waste almost 41% of the power supplied to their homes [7]. At the commercial level, approximately 30% of all primary energy is consumed by miscellaneous electrical loads (MELs). MELs are defined as all non-main electrical loads, which include a variety of electrical and electronic devices. MELs are the largest end-use category in terms of building electricity consumption and thus are frequently targeted in energy efficiency initiatives. Studies have shown that up to 35% of MEL loads can be saved [8,9]. This sector of consumption is highlighted in various categories of EIA's 2014 Annual Energy Outlook. Under the category "other uses" for the residential sector, the growth from 2012-

2040 is forecasted to be 1.9% increase per year (see Figure 2). While for the commercial sector, under the category "Office equipment," non–PC and other uses, the growth from 2012-2040 is forecasted to be 2% increase per year for both categories (see Figure 3) [6].

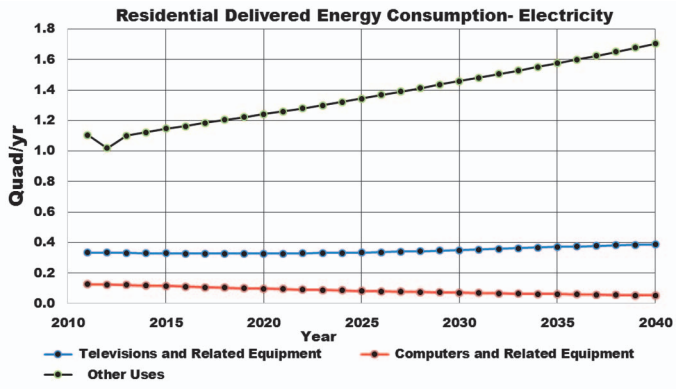

Fig. 2. EIA's Annual electricity consumption forecast for the residential sector for specific loads in the U.S.A. through 2040 [6].

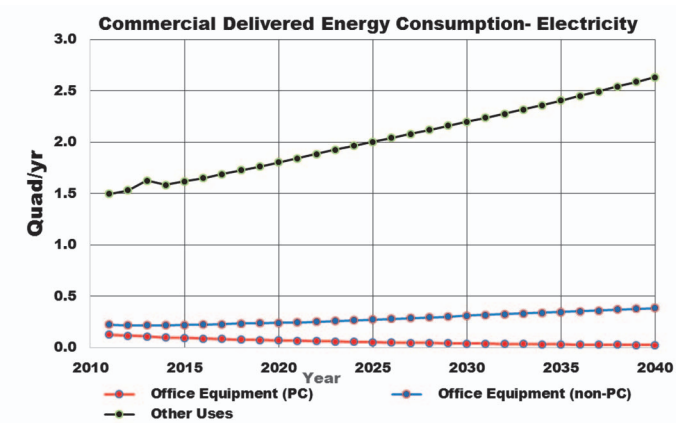

Fig. 3. EIA's Annual electricity consumption forecast for the comercial sector for specific loads in the U.S.A. through 2040 [6].

Collecting this information, i.e. real-time consumption data, is based on a top-down or bottom-up methodology and involves the measurement, manipulation, communication and transportation of fine-grain energy consumption data. Applications of this data are crucial to achieve energy conservation and energy efficiency in buildings using feedback tools [10-11] and improving the operation of the smart grid and enhancing the operation of DSM [12-14]. Specifically, as proposed in this paper, real-time, fine-grain consumption data at the point of use in buildings can be used by building energy managers, utilities and the end user for planning, load forecasting and end user behavior change.

This paper will discuss the development of a framework for remotely locating and monitoring real-time consumption data at the point of use in buildings for advancing research in the area of real-time monitoring. The focus of the paper will be on developing and validating the circuit-level energy node locator, one of the three components that comprise the frame work for remote monitoring. The energy node locater is based on the principles of Spectral Time-Domain Reflectometry (STDR). While this concept is not new for locating distances and faults in the electrical transmission system, this concept has never been use for the purposes discussed in this research due to the challenges in the existing configurations for the electrical system in buildings. Section II provides a brief summary of current research in energy monitoring in buildings. Section III describes the proposed framework in more detail and provides an overview of the fundamentals of TDR/STDR and its application in real-time monitoring. Section IV presents preliminary results and Section V concludes the paper.

II. Energy Monitoring in Buildings

A. Bottom-up approach

In [15] researchers at Carnegie Mellon University developed SAGA (Sensor-Actuator Gateway Agent), a system for building energy management, based on a wireless sensing and actuating system to sense and control electrical appliances. The SAGA platform consists of environmental sensing devices that sample light, audio, acceleration, temperature, humidity, passive infrared (PIR) motion and liquid detection, and a PlugMeter to monitor and control electrical outlets [16]. The system was deployed in three homes along with multiple deployments on the university campus. The networks consisted of anywhere between 12 and 30 nodes. The longest deployment lasted over two years. Data collected from these nodes revealed interesting information on how users react to remote monitoring and energy feedback and how this information can be used to infer activities within the monitored spaces. Researchers at MIT Media Lab developed the "Plug", a sensor node modeled on a common electrical power outlet strip with four standard electrical outlets [17]. The "Plug" platform includes sensing, communication, and computational abilities and forms the backbone of a ubiquitous computing environment. To test the proposed "Plug", 31 Plugs were installed on the third floor of the Lab for 20 hours data collection. Data collected included light, sound, voltage and current as well as motion and vibration activations. In [18] a Remote Electricity Actuation and Monitoring (REAM) node was developed to enable users to remotely activate power to a main power extension board and to sample the current, voltage, power, power factor of the attached load.

B. Topdown Approach

Researchers in [19] reported that meters were installed at two electrical panels in a building at Carnegie Mellon University to measure more detailed information than the information provided by a single meter at the building's main electrical system. The researchers indicated that the hardware and labor costs far exceeded the value of the aggregate information gathered, because the data was not certain even after tracing all the circuits to locate every outlet connected to the two panels. In [20] a direct and indirect sensing is investigated. The researchers used magnetic, light and acoustic sensors installed near appliances in homes and correlated these sensors with an aggregate power consumption data from a meter installed at the building's main electrical system. The sensors were an alternative to installing monitoring devices in-line with the electric wires. The developed system, called ViridiScope, provides a fine-grain power monitoring systems for the energy

consumption in residential spaces. To validate the proposed system, three cases where considered in a 2-person apartment. In the first case, three appliances were chosen to test the system (a PC computer, a refrigerator and a table lamp). In the second case, an alarm clock, a wireless router and a cable TV box were added to the first case. Finally in the third case, ViridiScope estimated the average power consumption of 9 different appliances by monitoring the on/off appliance status. The results show the system tracks the per-appliance power consumption to less than 10% error. In [21] researchers used ZigBee wireless sensor network to support energy management in buildings and demonstrated their work in a case study in with approximately 9 spaces. The case study used battery-driven wireless sensor nodes to measure temperature, light and humidity and a number of ZigBee devices with relays that were used as switches to remotely power off external equipment such as table fans, desk lamps, etc. In addition to remote activation, these devices are used as meters for measuring voltage, current, frequency, power consumption and load. The aim of the study was to study various wireless devices operating with different communication standards to support energy management.

III. PROPOSED FRAME WORK

A. Vision and Comprehensive Approach

The guiding principle behind this framework, which provides simultaneous, real-time, remote monitoring of several nodes, is based on the commonality of the nodes at the circuit level, overcurrent protective device [OCPD] or circuit breaker, serving these nodes. There are three components as shown in Figure 4. First, a circuit-level energy monitor provides aggregate energy consumption data and is an advanced data logger that monitors and stores detailed consumption information (e.g., voltage, current, frequency, and real and reactive power data). Second, a circuit-level node locator remotely identifies locations of active nodes using STDR [22] principles and physically locates active nodes in the electrical system. Third a central management unit that manages the collected data and identifies the consumption location for each physical node in the branch network. The management unit correlates the located active nodes with the associated de-aggregated energy consumption data to remotely provide the consumption locale and other detailed energy consumption information, such as usage frequency and usage patterns, at every node.

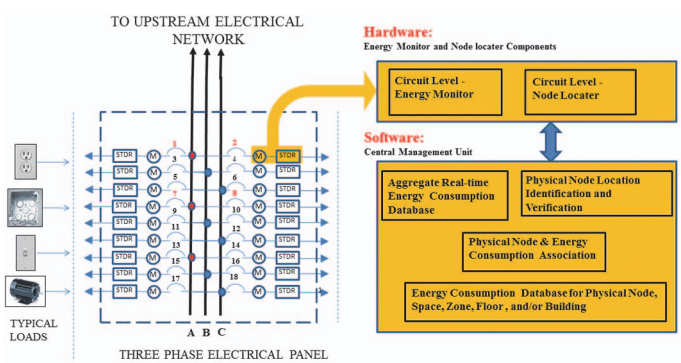

Fig. 4. Remote monitoring framework for the electrical system.

The identified nodes are then mapped to their actual physical locations (e.g., room, office, hallway, etc.). This real-time data from all active nodes are then virtually collected for the entire network to provide a complete representation of real-time energy consumption throughout the building.

B. Overview and Applications of TDR, S/SSTDR.

The identification of load locations is being investigated through Time Domain Reflectometry (TDR) principles [23]. It is used to locate cabling problems such as sheath faults, broken conductors, water damage, loose connectors, shorted conductors, smashed cables, crimps, system components and a variety of cable faults. TDR technology is based on sending shaped pulse waveform along the electrical conductor (wire) [22-27]. The wave propagates down the conductor and sends back a reflected signal to the TDR source (in the electrical panel) when it experiences an impedance change on the conductor. The distance from the point of reflection back to the TDR gives a unique temporal signature that can be used to determine the status of the conductor. The basic TDR equation relates the transmission and reflection signals from the input incident signal impressed on the conductor. The transmitted and reflected signals are expressed at a fraction of the incident signal: $\tau = 1 + \Gamma$, where τ and Γ are the transmission and reflection coefficients, respectively, with $\tau = \frac{2Z}{Z+Z_0}$ and $\Gamma = \frac{Z-Z_0}{Z+Z_0}$, where Z_o is the characteristic impedance of the line and Z is the load impedance.

This concept is being investigated to identify the location of each node along the electrical network by continuously sending a unique waveform onto the conductor linking all the nodes. Once a node's characteristic is modified, i.e. a load is connected, the location will be identified based on changes in the reflected signal. The measured distance will be compared with actual node lengths on that circuit in a pre-defined lookup table. The propagation of the wave along the conductor depends on the velocity of propagation (V_{OP}) or velocity factor of the conductor medium. In the event that a reflection occurs, the difference in time measurement of when the pulse is sent and reflected back is recorded. This difference in time is used with the velocity factor (V_F) of the cable to determine the distance (L) at which the pulse was reflected back using the following equation: $L=V_{OP}*C*t/2$, where C is the speed of light. The STDR display will show a rise in the reflected signal amplitude when the impedance change is higher than that of the STDR and a drop in the signal amplitude when the impedance change is lower than that of the STDR. Points of reflection along the conductor will potentially be the various electrical nodes with connected loads. When an outlet is not in use, the reflected pulse signal display on STDR apparatus will only show an open circuit.

To demonstrate the feasibility of this concept, Figure 5 shows a hypothetical setup for the MATLAB simulation. The configuration setup consist of a TDR connected to a #14 American Wire Gauge (AWG) conductor linking 4 power nodes. The current state shows loads connected to all 4 nodes with 20, 40, 20, and 10 Ohms, respectively.

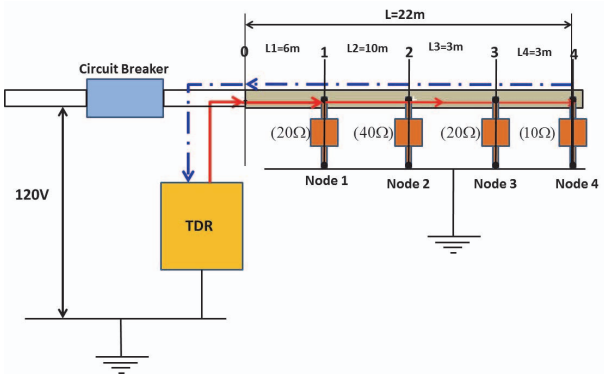

Fig. 5. Hypothetical Setup for MATLAB Simulation of TDR.

The MATLab simulation results of the TDR are shown in Figure 6. Based on the simulated results shown in Figure 6, TDR captures reflections from node locations with connected loads. The graph shows amplitude reflections of TDR incident wave at respective distances of nodes from the electrical panel. The amplitude of the reflections increases when the change in impedance is increasing from node to node and decreases when there is a reduction. When there is no load or impedance change at the node or along the conductor no reflection occurs. The various node locations with connected loads are shown as reflections on the graph at 6, 16, 19, and 22 meters respectively from the TDR location.

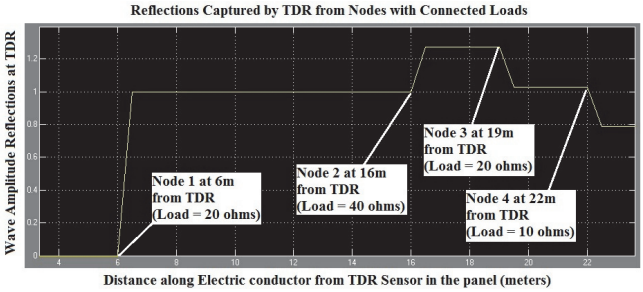

Fig. 6. Simulated Reflections Detected by TDR from Node Locations

While traditional TDR devices are used on non-live wires, STDR is used on live wires. For live wires, STDR injects a modulated pseudo-random noise (PN) signals onto the conductor. The reflected signal is then demodulated and then fed into a correlator along with the incident signal. The correlator output is then further processed to determine the location and nature of the impedance discontinuities (open circuit, short circuit, and intermittent arcs) along the conductor.

IV. Preliminary Demonstration

A. System setup

A demonstration approach is used to validate the circuit level energy node locator that determines the physical length of a given node when a load is connected to that node. An actual electrical distribution network that is part of a building's existing electrical system is built, using four circuit breakers with six nodes. The specifications and constraints of this setup are identified and used to establish the operating frequency of the signal that will be injected onto the electric wiring system. The actual Nominal Velocity of Propagation (NVP) of typical wires/cables used in the electrical systems is determined. The NVP of #12 AWG wires/cables is measured to be 69% using handheld testers [28], see Figure 7. When a reflection occurs, one half of the time delay measurement between the incident and reflected pulses is recorded [29] so that the product of this time and the cable velocity determines the position where the reflected pulse was generated. No reflection occurs when there is no impedance discontinuity. The shape of the reflected pulse can be analyzed to determine the nature of the complex impedance load at the discontinuity [23-30]. In order to achieve a full range of detection for cable lengths, a 15-bit m-sequence is used to determine the cable length in live and dead wire experiments.

Fig. 7. Handheld tester used to determine the electrical length of the cable using nominal velocity of propagation.

Once the signal waveform has been determined, capacitive and inductive coupling techniques are investigated to couple the signal to the live cable. Using well established tools from Power line communication, a preliminary capacitive coupling circuit, as shown in Figure 8 was developed and used in the preliminary experiment. However, an investigation continues to find the relationship between the coupling circuit and the system characteristics (including frequency, length of branched network, and resolution) for optimum coupling and operation.

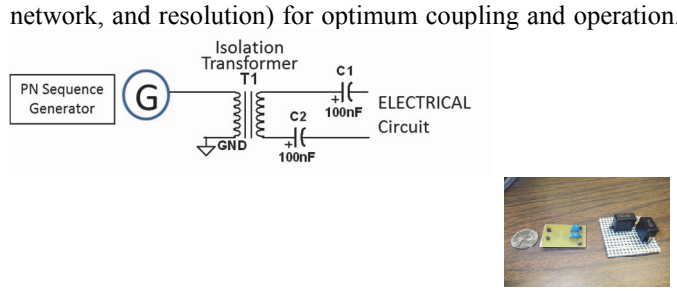

Fig. 8. Coupling circuit options for live cable connection

B. Preliminary experiment/results

A 15-bit m-sequence at 2.22 MHz was employed to determine the cable length in live and dead wire experiments. Enhanced resolution and increased range of detection can be achieved by employing a longer sequence and increasing the number of chips, but physical devices used to generate the sequence impose practical limits on attainable processing gain. To achieve high resolution, small rise and fall time is favorable, around 1ns. However, the function generator utilized in these experiments has minimum of 15 ns of rise and fall time.

To perform correlation, the reflected m-sequence is measured for every location where a reflection can occur. The

ideal, MATLAB-generated m-sequence is transmitted and cross-correlated with the reflected m-sequences over two periods. The time delay between the highest peak and the subsequent peaks is measured to determine the round trip time. This time delay is then used to determine the length of the cable.

The initial experiment was performed on a 30 ft long dead wire, which was connected from the function generator through the coupling circuit. The signals were recorded at the output of the coupling circuit (the reference signal) and with open and short connection. These signals were individually cross-correlated with the ideal m-sequence, and placed on a same graph as shown in Figure 9. The time delay was measured by identifying the peaks in the signal, and calculating difference with respect to the reference signal (peak at 0). The peaks corresponded to the length of 33 ft for an error 3 ft. The graphs also illustrate the expected behavior of the open and short circuits. The curve peaks and dips at the same point for an open circuit and a short circuit, respectively.

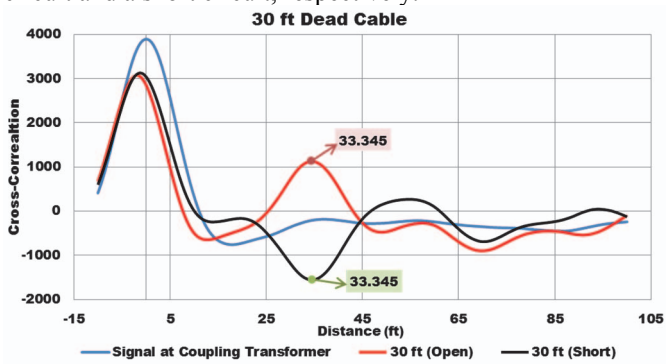

Fig. 9. Cross correlation results for a 30-ft dead wire

Live wire tests were then performed on a single bus, four-circuit breaker panel as shown in Figure 10. To test changes due to injection of the signal on the live wire, the coupling circuit is moved between the circuits based on the test being performed. For example the coupling circuit in Figure 10 is shown connected to circuit 1. For the test discussed next, the coupling circuit was connected circuit 8, which is a 50-ft cable with a node located at 40 ft and another node connected at 50 ft. A 1500 W heater (purely resistive) load was plugged into the 40 ft node. The correlation result of 38.8 ft as shown in Figure 11 is close to the actual value. However, when the same load was plugged into the 50 ft node, the result was off by 9 ft. This high discrepancy may be due to the limited resolution of the signal waveform which cannot resolve length less than 20 ft, whereas the length in this setup is 10 ft. The peaks appearing before the desired peak may be the result of reflections from other nodes from different circuits, as all four of the circuit breakers were on during the experiment. Figure 12 shows the correlation result for a 20 ft load circuit, demonstrating the resolution of the m-sequence that is limited by the equipment in the experiments.

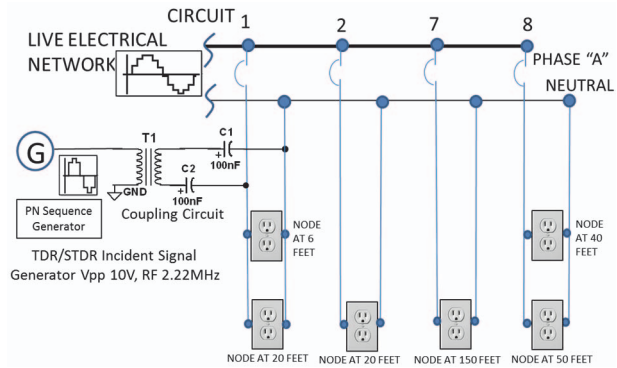

Fig. 10. Live circuit setup.

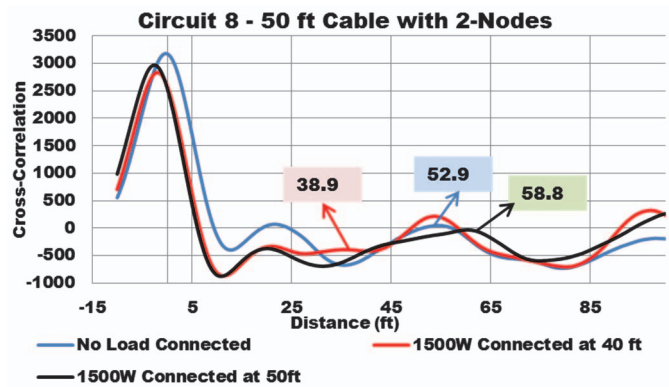

Fig. 11. Circuit 8, 50 ft cable with two nodes (40 ft and 50 ft from the circuit breaker).

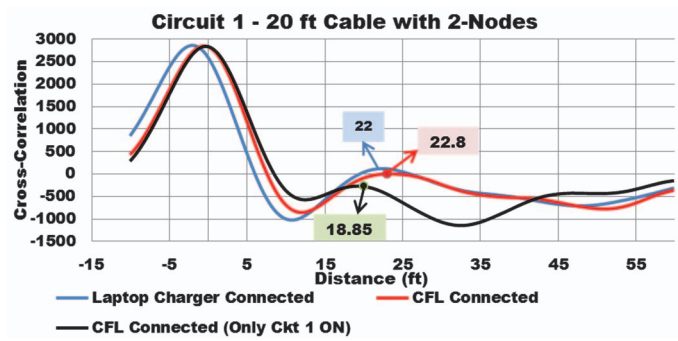

Fig. 12. Circuit 1 load at 20 ft

V. Summary and Future Work

This paper discusses the development of a framework for remotely locating and monitoring real-time consumption data at the point of use in buildings. The discussion focuses on the circuit level energy node locator which uses the principles of reflectometry to detect the physical location of active nodes. A preliminary demonstration system was shown to confirm the approach in a limited capacity. The initial results demonstrate the capability of the proposed node locator approach to capture and process signal waveforms for different loads at different nodes. The result clearly identifies the physical length with minimal signal distortion in the experiment.

The look up table contains information on each branch circuit with fixed node locations. There are many challenges to this

approach including multiple nodes with exact distances on the same branch circuit. In addition, the user may use multi-plug extenders and extension cords that will add to the length of the nodes. Furthermore, the type of signal to be used is also critical in the success of the identification process. While these challenges are present, it is hoped that the successful development of this concept will be the foundation for advancement in this area of monitoring to discover and build on successful implementations. Additional testing of the concept at the building level within multiple active circuit breakers and panels will be carried out to validate this concept and will be presented at the conference.

ACKNOWLDGMENT

This work has been supported in part by the Environmental Protection Agency (EPA), P3, student competition and the Durham School of Architectural Engineering and Construction. The authors would like to also thank the Center for Urban Sustainability at the University of Nebraska at Omaha for their support.

REFERENCES

[1] W-H Edwin Liu; Kevin Liu; Dan Pearson; "Consumer-Centric Smart Grid," in Proc. of IEEE Innovative Smart Grid Technologies (ISGT), 2011, pp. 1-6.

[2] F. Boshell and O. Veloza, "Review of developed demand side management programs including different concepts and their results," in Proc. IEEE Transmission and Distrib. Conf. Expo.: Latin America,PES, 2008, pp. 1–7.

[3] P. Palensky and D. Dietrich, "Demand side management: Demand response, intelligent energy systems, and smart loads," IEEE Trans. Ind. Inform., vol. 7, no. 3, pp. 381–388, Aug 2011.

[4] A. Mohsenian-Rad, V.W.S.Wong, J. Jatskevich, R. Schober, A. Leon-Garcia, "Autonomous Demand-Side Management Based on Game-Theoretic Energy Consumption Scheduling for the Future Smart Grid," Smart Grid, IEEE Transactions on , vol.1, no.3, pp.320-331, Dec. 2010.

[5] U.S. Green Building Council (USGBC),"Green Building Facts." U.S. Green Building Council, "http://www.usgbc.org/ShowFile.aspx?DocumentID=5961".

[6] U.S. Energy Information Adminstration, AEO2014 Early Release overview; http://www.eia.gov/forecasts/aeo/er/tables_ref.cfm

[7] Williams, Eric D., & Matthews, H. Scott., "Scoping the Potential of Monitoring and Control Technologies to Reduce Energy use in Homes," Proceedings of the 2007 IEEE International Symposium on Electronic & Environment, May 2007, pp. 239-244.

[8] Department Of Energy, Energy Information Admission, Annual Energy Outlook 2006 with Projections to 2030, DOE/EIA-0383(2006), February 2006, http://tonto.eia.doe.gov/ftproot/forecasting/0383(2006).pdf, Accessed 2-1-2012

[9] McKenney, K., Guernsey, M., Ponoum, R., & Rosenfeld, J. (2010). Commercial Miscellaneous Electrical Loads: Energy Consumption Characterization and Savings Potential in 2008 by Building Type. TIAX LLC., Lexington, MA.

[10] Emily Rieur, Mahmoud Alahmad, "On the Discourse of Energy as Material: Future Feedback Technologies and Directions for Experiencing Energy," IEEE Trans. on Industrial Informatics, Volume: 10, Issue 1, Feb 2014, pages 742-751.

[11] Mahmoud Alahmad, Patrick G. Wheeler, Avery D. Schwer, Joshua M. Eiden, and Adam Brumbaugh, "A Comparative Study of Three Feedback Devices for Residential Real-Time Energy Monitoring," IEEE Trans. on Industrial Electronics, Vol. 59, No 4, April 2012.

[12] Falvo, M. C., et al. "A flexible Customer Power Device for energy management in a real Smart Micro-Grid." Industrial Electronics Society, IECON 2013-39th Annual Conference of the IEEE. IEEE, 2013.

[13] Annala, Salla, et al. "Smart use of electricity-How to get consumers involved?." Industrial Electronics Society, IECON 2013-39th Annual Conference of the IEEE. IEEE, 2013.

[14] Croft, Aaron, John Boys, and Grant Covic. "Net energy stored control for residential demand-side management." Industrial Electronics Society, IECON 2013-39th Annual Conference of the IEEE. IEEE, 2013.

[15] Buevich, M.; Rowe, A.; Rajkumar, R., "SAGA: Tracking and Visualization of Building Energy," IEEE 17th International Conference on Embedded and Real-Time Computing Systems and Applications (RTCSA), Toyama, Japan. 28-31 Aug. 2011.

[16] FireFly Sensor Networking Platform, http://www.nanork.org/projects/nanork/wiki/FireFly3?version=16.

[17] J. Lifton , M. Feldmeier , Y. Ono , C. Lewis and J. A. Paradiso "A platform for ubiquitous sensor deployment in occupational and domestic environments", Proc. 6th Int. IEEE/ACM Conf. Inf. Process. Sensor Netw., pp.119 2007.

[18] O'Connell, S.; Barton, J. ; O'Connell, E. ; O'Flynn, B. ; Popovici, E. ; O'Mathuna, S.C. ; Schoofs, A. ; Ruzzelli, A. ; O'Hare, G.M.P. "Remote Electricity Actuation and Monitoring mote," 2011 International Conference on Distributed Computing in Sensor Systems and Workshops (DCOSS), Barcelona, Spain. 27-29 June 2011.

[19] M. Berges, E. Goldman, H. S. Matthews, L. Soibelman, "Learning Systems for Electric Consumption of Buildings," ASCE International Workshop on Computing in Civil Engineering, Austin, Texas, 2009.

[20] Z. C. Younghun Kim, Thomas Schmid and M. B. Srivastava, "ViridiScope: Design and implementation of a fine Grained Power Monitoring system for Homes," In UbiComp, pages 245-254, 2009.

[21] Hanne Grindvoll, Ovidiu Vermesan, Tracey Crosbie, Roy Bahr, Nashwan Dawood, Gian Marco Revel (2012) A wireless sensor network for intelligent building energy management based on multi communication standards – a case study, ITcon Vol. 17, pg. 43-62.

[22] C. Furse, Y. C. Chung, C. Lo and P. Pendayala. (2006). "A critical comparison of reflectometry methods for location of wiring faults" Smart Structures and Systems, Vol. 2. No. 1, pp. 25-46. 12

[23] Hartebrodt, Martin, and Klaus Kabitzsch. "Fault detection in fieldbuses with time domain reflectometry." *AFRICON, 2004. 7th AFRICON Conference in Africa*. Vol. 1. IEEE, 2004.

[24] You Chung Chung, Nirmal N. Amarnath, Cynthia M. Furse, and John Mahoney (2009), "Capacitance and Inductance Sensors for locating of open and Short Circuited Wires", IEEE Transaction on Instrumentation and Measurement, Vol. 58. No. 8.

[25] Paul K. Kuhn, Cynthia Furse, and Paul Smith (2006). "Loacting Hidden Hazards in Electrical Wiring" Aged Electrical Systems Research Application Symposium.

[26] J. Reis, A. L.S. Castro, J.C.W.A Costa, J. R.I. Riu, and K. Ericson, " Sequence and Spread Spectrum Time Domain Reflectometry for Transmission Line Analysis" Applied Electromagnetism Laboratory, Federal University of Par´a, DEEC, Bel´em-PA, Brazil; Signal Processing Laboratory, Federal University of Par´a, DEEC, Bel´em-PA, Brazil; Ericsson, Kista, Stockholm, Sweden, 2007.

[27] C. Furse, P. Smith, M. Safavi, and J. Gunther, (Dec. 2005). "Analysis of Spread Spectrum Time Domain Reflectometry for Wire Fault Location," IEEE Sensors J., Vol. 5, no. 6, pp. 1469–1478.

[28] LiveWire Innovation, FaultChaser product. [Online]. Available: http://livewireinnovation.com/products-and-services/faultchaser/

[29] AEA Technology Inc. (2005), "AN200 Basic Theory of TDR Operation". [Online]. Available: <<http:// www.aeatechnology.com>>.

[30] Agilent Technologies, (2006). "Time domain reflectometry theory, application". Note 1304-2.7.